RJ Reynolds Tobacco Company

FSC-317-C

AUG 10

August 4, 1994

910-741-5000
Winston-Salem, N.C. 27102

TO ALL FIELD SALES PERSONNEL:

SUBJECT: ADDITIONAL FULL PRICE DISPLAY PRESENCE ITEMS - LIGHTED ENHANCEMENT KITS FOR SYSTEM 3 PACK TRAYS

To add to your Full Price Presence arsenal, we are pleased to announce the availability of Lighted Enhancement Kits for use on permanent System 3 displays. These items may be used in conjunction with semi-permanent displays and/or permanent PDI pieces to further enhance RJR Full Price brands at retail. All items are immediately available on open order until current supplies are depleted. Order information is as follows:

Item Description	Item #	SKU Packing	System 3 Tray Needed	Transparency Size
Enhanced 40-pack Tray Kit	463425	1	40-pack Tray	24" Pkg. Mdsg. Trans.
Enhanced 80-pack Tray Kit	463422	1	80-pack Tray	24" Pkg. Mdsg. Trans.
Curve Lens 40-pack Tray Enhancement Kit	463413	1	40-pack Tray	19" Canopy Trans.

These enhancements were developed to assist you by:

- Cutting through retail clutter with lighted point-of-sale.
- Providing the capability of lit advertising for brands located in a secondary position.
- Increasing RJR Full Price Display presence when located on or away from the primary cash register (the Curved Lens Kit #463413 was designed specifically for locations in the "action zone" in close proximity of the cash register).
- Allowing you to enhance current System 3 displays while utilizing only (1) plug outlet.

These enhancement kits make a dramatic difference in RJR impact to the consumer at retail. Each item number is packed individually in order that you may ship directly to the retail store, if desired. Enhancement kits do not include the appropriate package tray, but consist of a light box and 2 molded end caps to fit the designated System 3 tray. Kits are assembled with a Camel transparency and (2) Camel inserts for the molded end caps. Interchangeable Winston Select ad copy is also included in each kit. Each light box is equipped with a plug outlet in order that any lit top signage currently on location may be plugged in without the use of more than one 110 volt outlet. Conversion of a current System 3 lit display takes 3-5 minutes per unit.

Please note the enclosures for a pictorial preview of these items.

Note to RMs/ROMs: The enhancement kits are funded by the WINSTON/CAMEL business unit and will have no effect on your 1994 fixture budget. Any questions should be directed to your merchandising department representative. The program contact is Mike Buckler, ext. 1625.

Note to Sales Reps: Communicate your request for each of the enhancement kits to your Region Operations Units.

R. J. REYNOLDS TOBACCO COMPANY
Enclosures

51847 6214

"We work for smokers."

Source: https://www.industrydocuments.ucsf.edu/docs/tphy0000

FULL PRICE DISPLAY ENHANCEMENTS

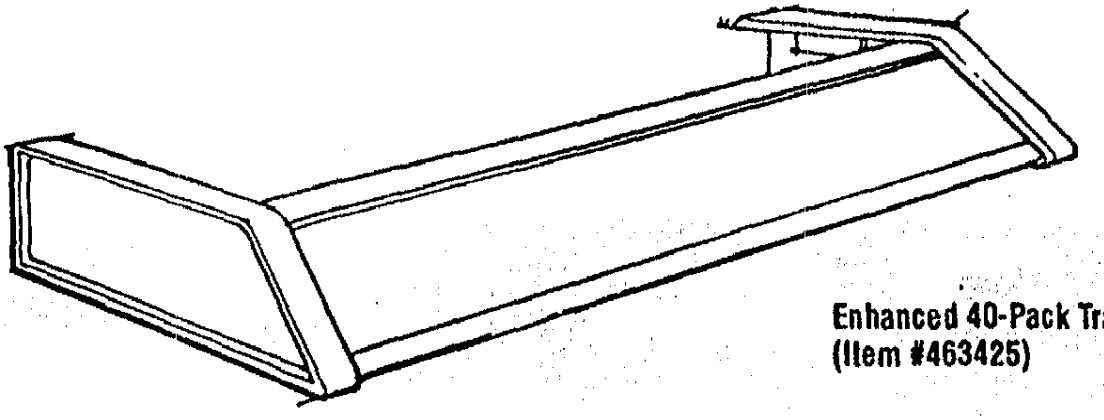

Enhanced 40-Pack Tray Kit
(Item #463425)

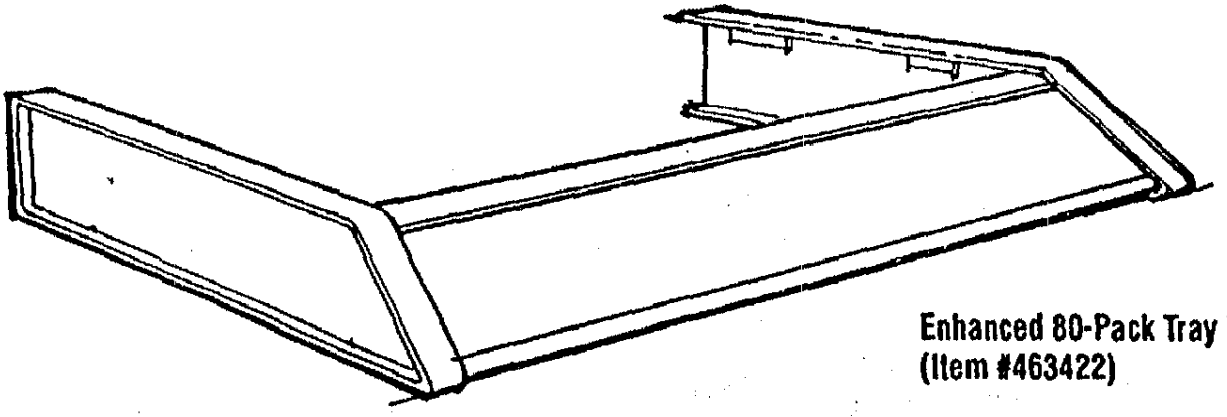

Enhanced 80-Pack Tray Kit
(Item #463422)

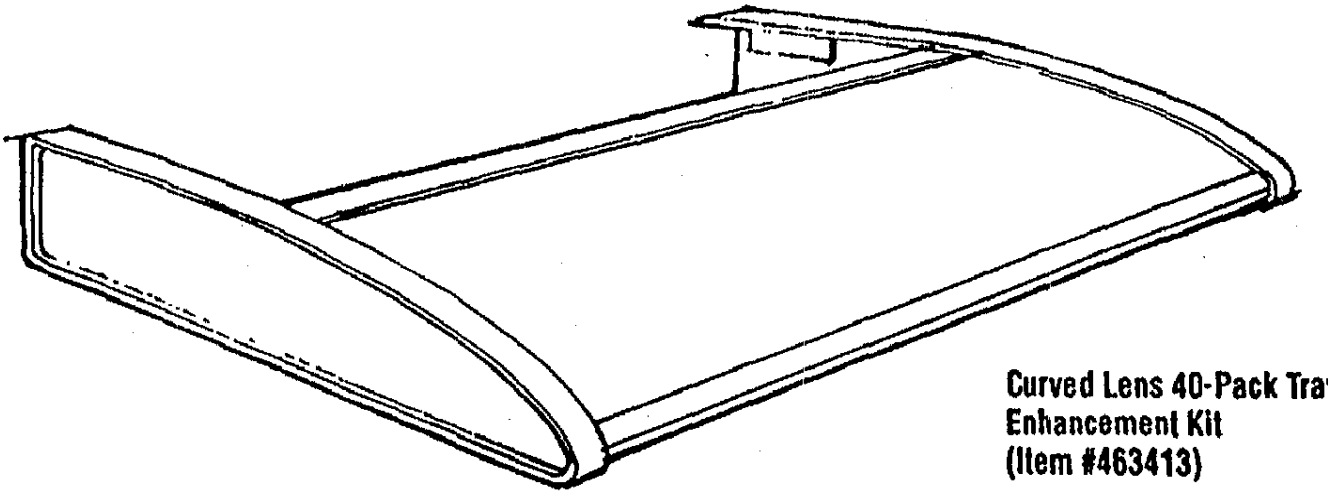

Curved Lens 40-Pack Tray
Enhancement Kit
(Item #463413)

51847 6215

Source: https://www.industrydocuments.ucsf.edu/docs/tphy0000

Full Price Display Enhancements

S3E01

Enhanced 40-Pack Tray Kit
(Item #463425)

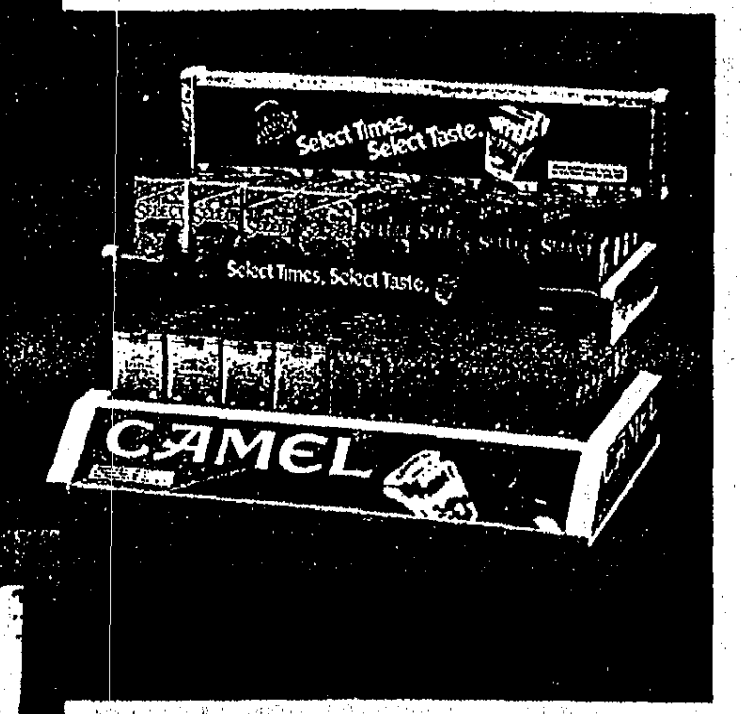

S3E02

Enhanced 80-Pack Tray Kit
(Item #463422)

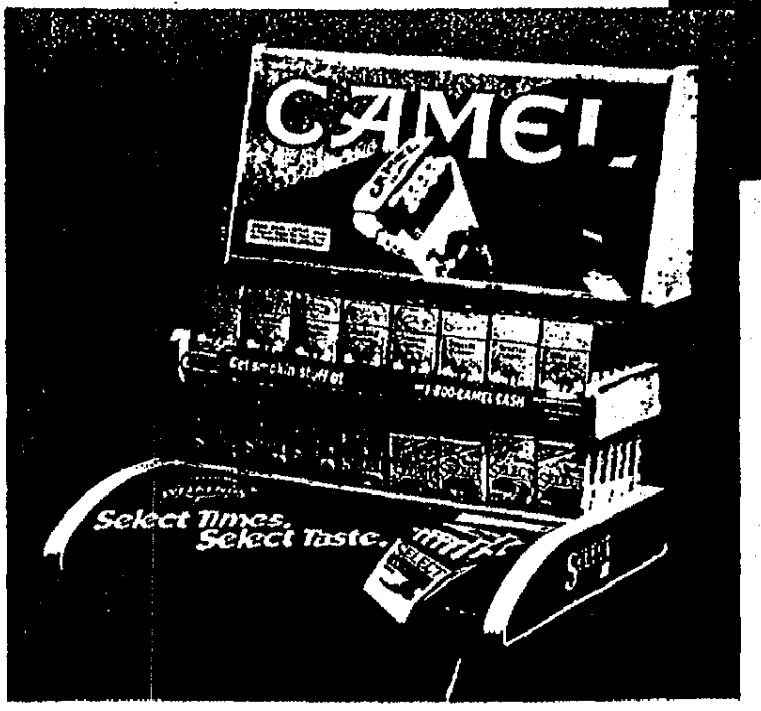

S3E03

Curved Lens 40-Pack Tray Enhancement Kit
(Item #463413)

51847 6216

©1994 R.J. REYNOLDS TOBACCO COMPANY

S3E001

Source: https://www.industrydocuments.ucsf.edu/docs/tphy0000